Common reference potential (Shielding and Grounding)

Motor / Inverter

In the case of high-frequency interference, it is not the cross-section of the wire important, but the surface (because of skin effect).
Use a tin-plated ground strap with 10 mm²

Motor

Connect each motor separately to the common reference potential.

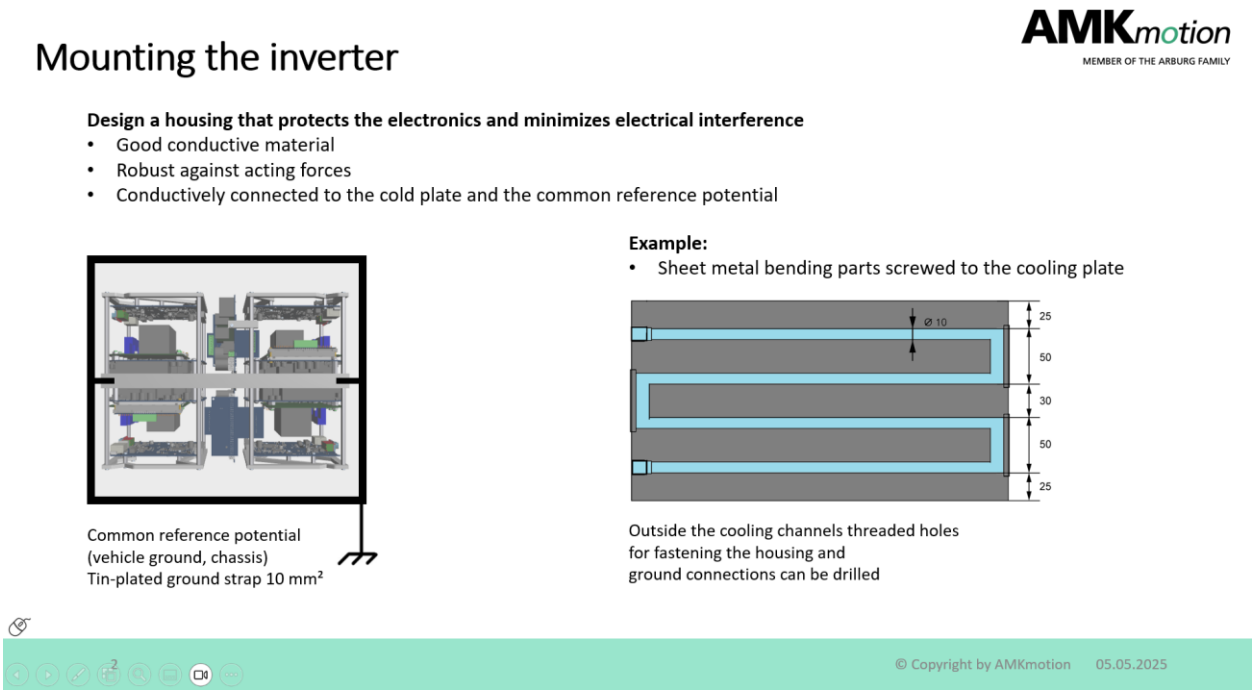

Reference potential

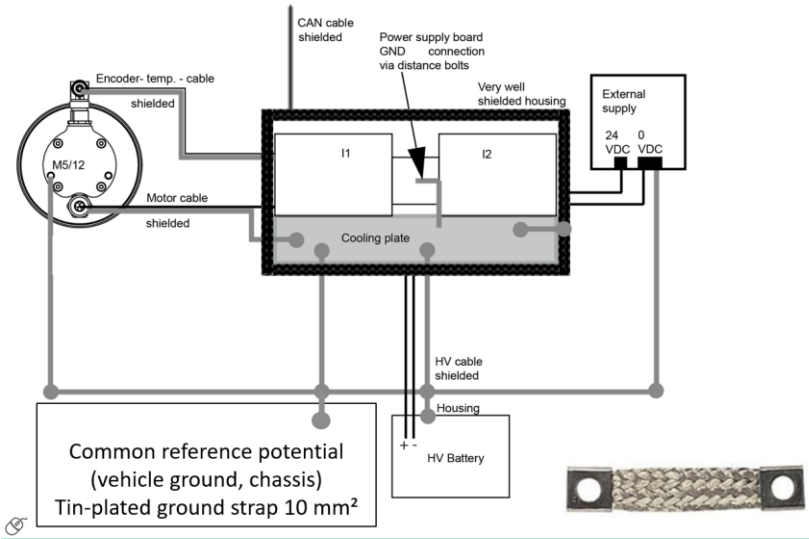

Cables
(connect cable shield on both sides)
- HV cable
- Motor cable
- Encoder cable
- CAN cable

External 24 VDC power supply batterie
- Apply 0 VDC

Motor
- Additional ground strap

Conductive inverter housing
- Cooling plate

Cooling plate
- Common reference potential (car ground, car chassis)

Ground strap advantage
In the case of high-frequency interference, it is not the cross-section of the wire important, but the surface (because of skin effect)

© Copyright by AMKmotion 05.05.2025

Reference potential

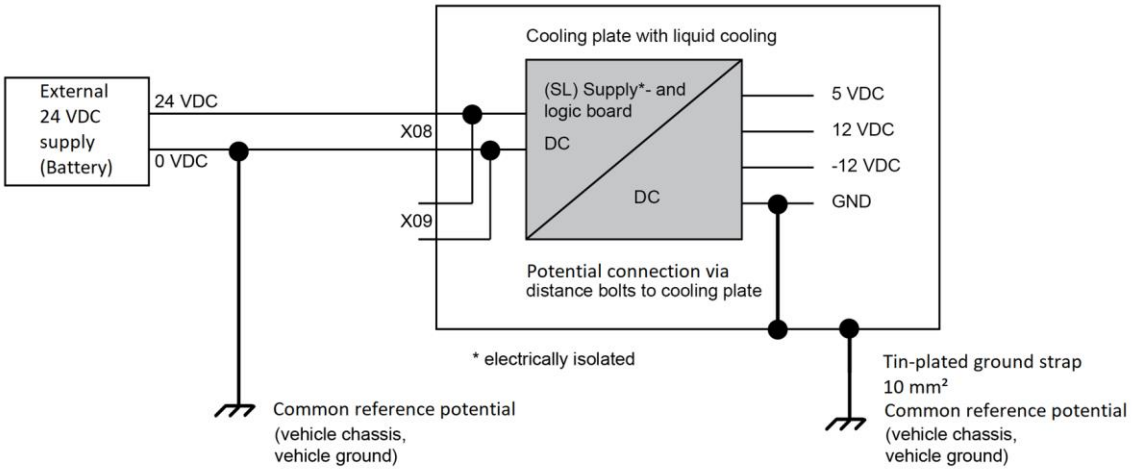

© Copyright by AMKmotion 05.05.2025

Reference potential

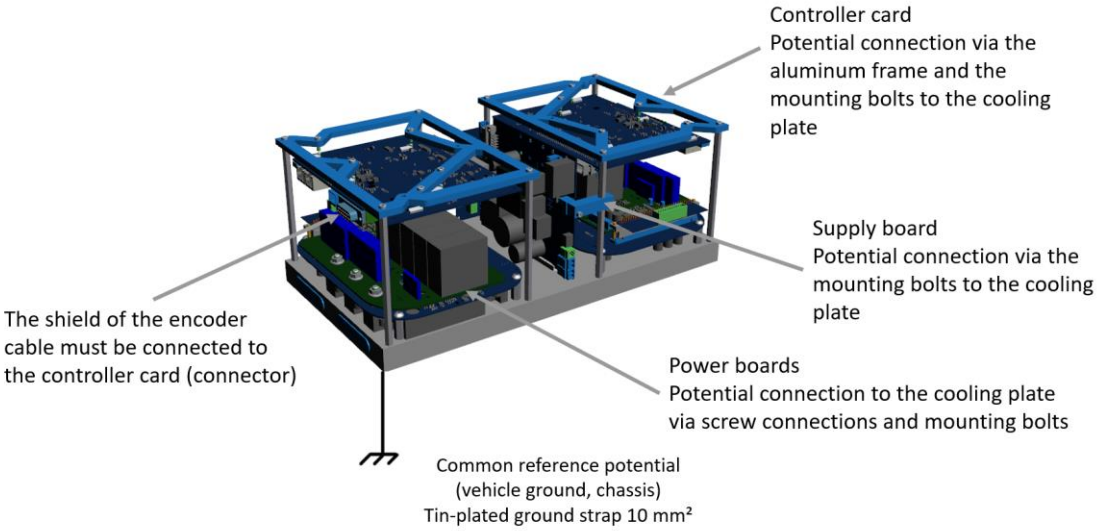

© Copyright by AMKmotion

Motor cable connections - cable shield

Goal: Minimize electromagnetic interference from the drive

- Cable shield continuously closed around the motor cables
- Overlapping (pressed) shield connection between motor cable and cable extension

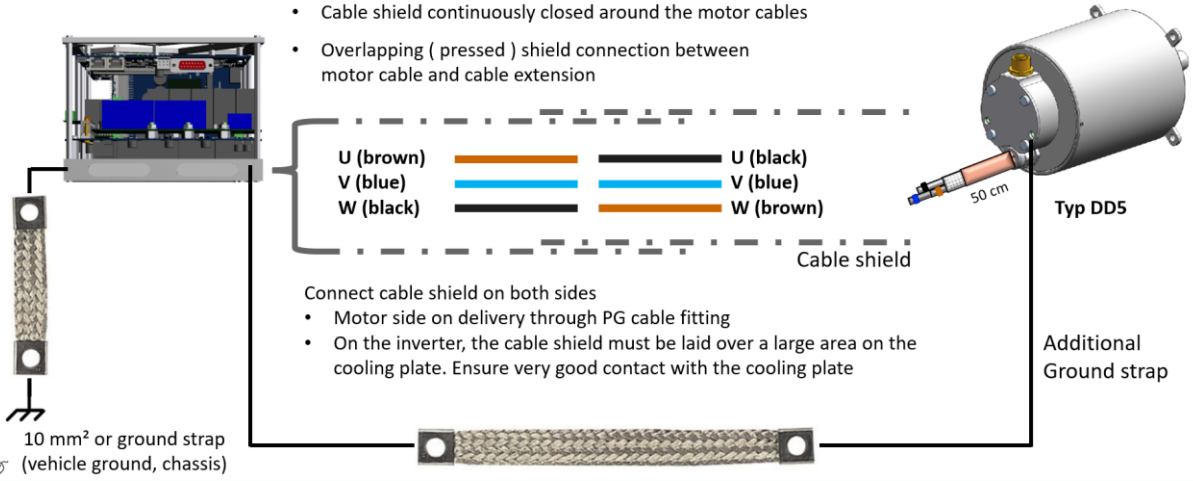

Connect cable shield on both sides
- Motor side on delivery through PG cable fitting
- On the inverter, the cable shield must be laid over a large area on the cooling plate. Ensure very good contact with the cooling plate

© Copyright by AMKmotion

Cable shield encoder and sensor cable

Apply shield connection on both sides (motor and controller card)

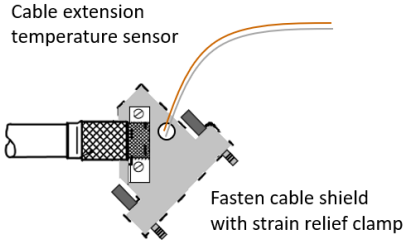

Modified metallized
D-SUB housing
with feed-through
for the temperature sensor cable

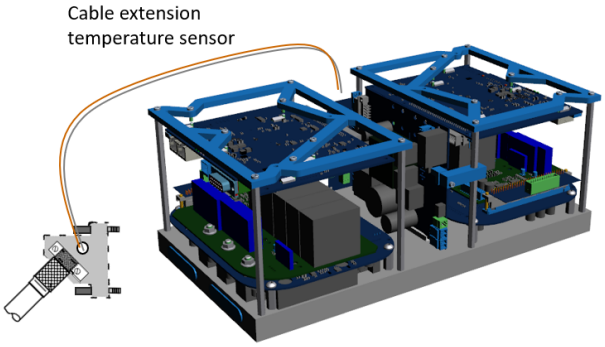

Screw D-SUB
housing
to controller card

© Copyright by AMKmotion